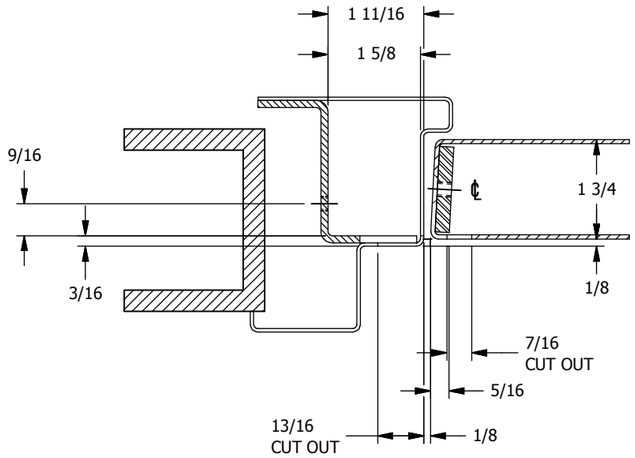

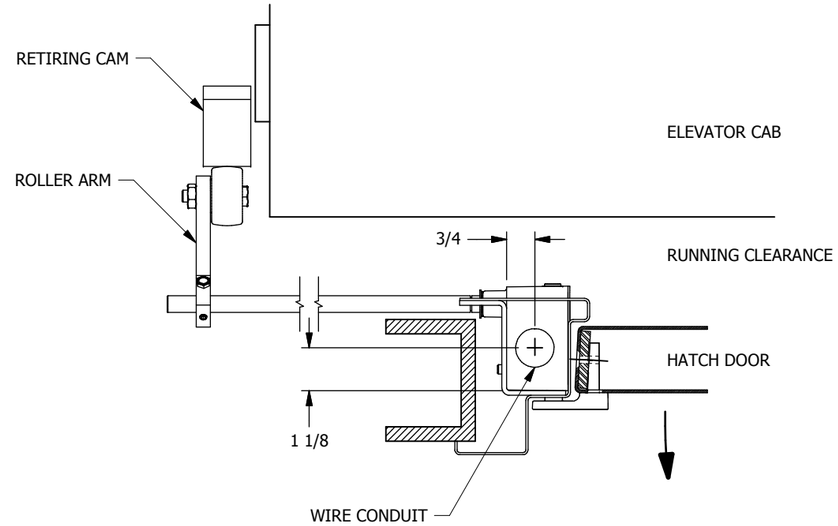

FIGURE 1 LOCK & CONTACT ARRANGEMENT

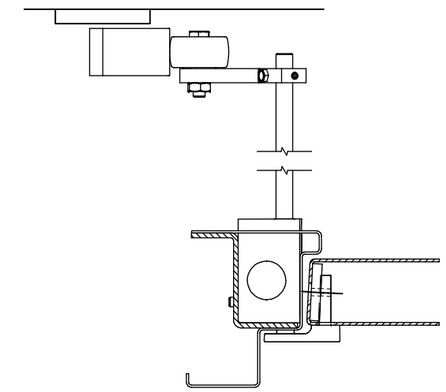

FIGURE 2 LOCK & CONTACT ARRANGEMENT
USES THE SAME CUTOUTS AND REINFORCEMENTS

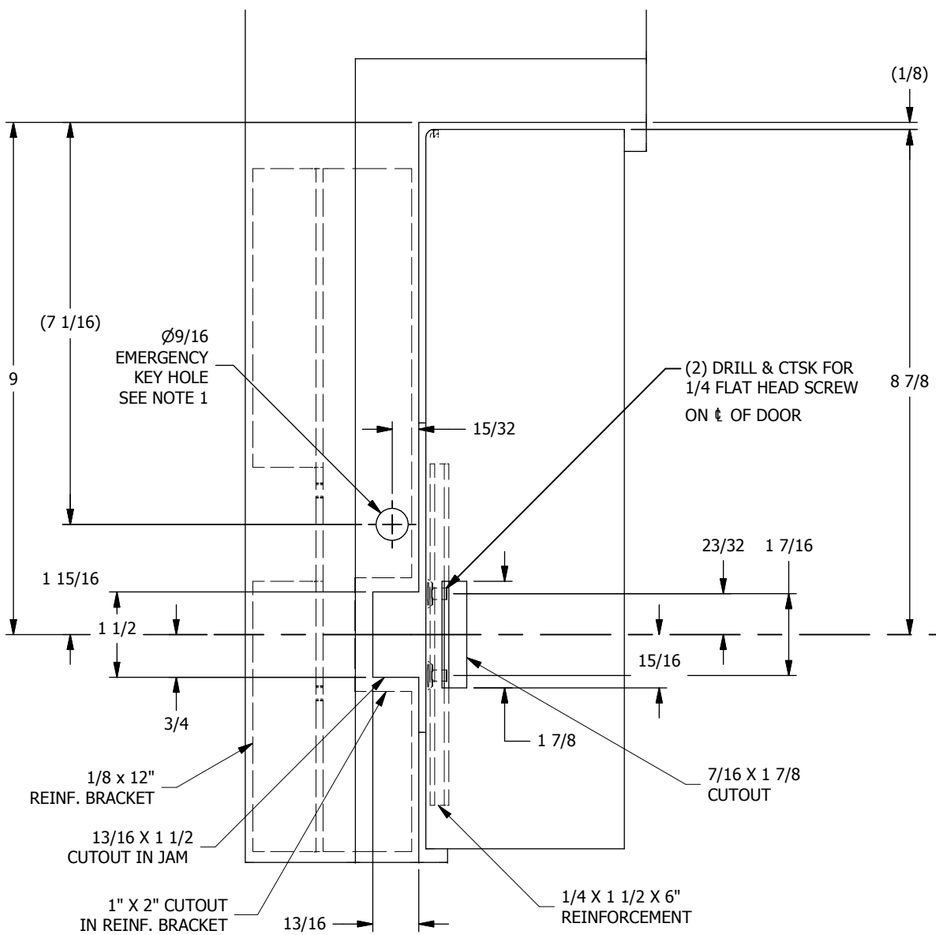

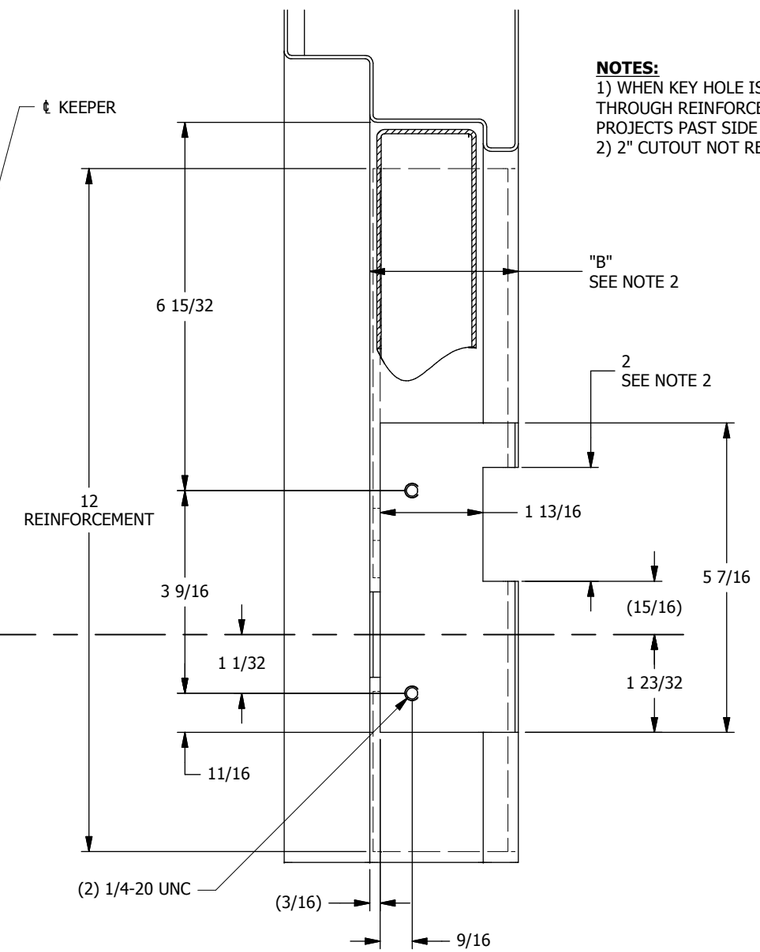

NOTES:
1) WHEN KEY HOLE IS NOT REQUIRED, SUPPLY 9/16 HOLE THROUGH REINFORCEMENT ANGLE. LOCK SHAFT SLIGHTLY PROJECTS PAST SIDE OF BOX.
2) 2" CUTOUT NOT REQUIRED IF "B" IS LESS THAN 2".

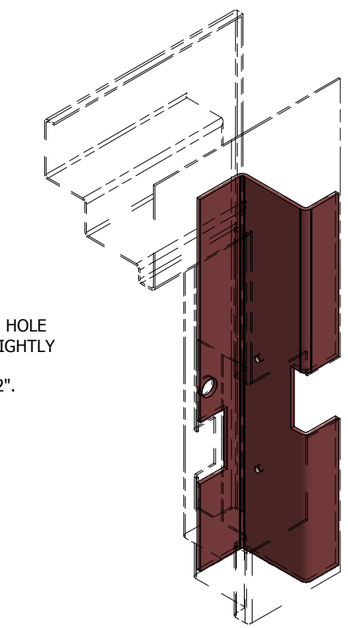

LH SHOWN
RH OPPOSITE

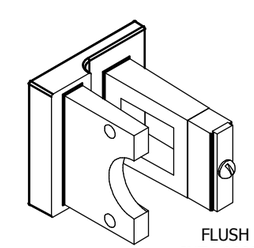

FLUSH
INT4-0002N

"SN" LOCK AND CONTACT FLUSH MOUNTED DOOR & JAMB DRILLINGS & REINFORCEMENTS FOR SWINGING DOOR INSTALLATIONS

UNLESS OTHERWISE SPECIFIED DIMENTIONS ARE IN INCHES ---- (X.XX) = X.XX REF. = REFERENCE ONLY

G.A.L. MANUFACTURING CORP.
50 East 153rd St. Bronx, NY 10451 (718)292-9000

THIS DRAWING AND THE DESIGNS CONTAINED IN IT ARE THE SOLE PROPERTY OF **G.A.L. MANUFACTURING CORP.** IT IS FURNISHED UNDER THE CONDITION THAT IT SHALL NOT BE COPIED, LOANED OR OTHERWISE DISTRIBUTED OR DISPOSED OF, DIRECTLY OR INDIRECTLY, WITHOUT PRIOR WRITTEN PERMISSION.

SHEET 1 OF 1 REV: A
PART/DOCUMENT #
8715-02

DRAWING: 8715-02.idw
MODEL: SW21-002.iam

8715-02